产品技术规格书

Product specification

Battery Model（电池型号）：LP51.2-100(51.2V100AH)

Customer Name（客户名称）：

Manufacturer	Prepared by/date	Checked by/date	Approved by/date
Customer Approval	Checked by/date	Approved by/date	

目录 Catalogue

Amendment Records (修正记录)				
Edition (版 本)	Description (记 述)	Prepared by (编 制)	Approved by (批 准)	Date (日 期)
A0	First Edition	Xin.Han	Yadong.Qin	2023-4-17

1. Scope(适用范围)

This specification is applied to the battery pack manufactured by Shenzhen LithPower Technology Co., Ltd.

本说明书适用于本书中所提及的由深圳市力思能科技有限公司制造的电池组。

2. Product Specification(产品技术规格)

项目（Items）	规格（Specification）	
2.1 额定容量（Nominal Capacity）	100Ah	
2.2 标称电压（Nominal Voltage）	51.2V	
2.3 充电截止电压（Charging Cut-off Voltage）	57.6V	
2.4 充电方法（Charging method）	CC-CV 恒流到设定电压转恒压充电至截止电流（Constant Current with limited Voltage- Constant Voltage with limited Current）	
2.5 最大持续充电电流（Max. Continuous Charge Current@25℃）		100A
2.6 最大持续放电电流（Max. Continuous Discharge Current@25℃）		100A
2.7 最大放电功率（Max Discharge Power @25℃）		5.12KW
2.8 峰值放电功率（Peak Discharge Power @25℃,100ms）		7.68KW
2.9 放电终止电压（Discharge Cut-off Voltage）		43.2V
2.10 工作温度（Operating Temperature）	充电（Charge）	0℃ ~ 45℃
	放电（Discharge）	-20℃ ~ 60℃
2.11 储存温度(50%SOC)（Storage Temperature）	3 个月（3 months）	-20℃ ~ 45℃
	6 个月（6 months）	-20℃ ~ 35℃
	12 个月（12 months）	-20℃ ~ 25℃
2.12 重量（Weight）	≈45Kg	
2.13 内阻 internal resistance	＜35mΩ	SOC=50%
2.14 通讯方式 communication mode	RS232/RS485/CAN	

3. Electrical Specification(电气规格)

<table>
<tr><th>项目（Items）</th><th>测试方法（Test Condition）</th><th>标准（Criteria）</th></tr>
<tr><td>3.1
标准充电
Standard Charge</td><td>标准充电是指电池在环境温度 25±3℃下，以 20A 恒电流充电至电压 57.6V，恒电压 57.6V 充电至截止电流 2A （用锂离子电池专用充电器，电压精度±0.05V），停止充电，总充电时间不超过 7 个小时。(The "Standard Charge" means charging the Battery with initial charge current 20A and with constant voltage 57.6V, then constant voltage 57.6V with floating current taper to 2A cut-off (Charger for exclusive use lithium ion rechargeable battery, with an accuracy ±0.05V) at 25±3℃ for most 3 hours.)</td><td>/</td></tr>
<tr><td>3.2
标准放电
Standard Discharge</td><td>电池以标准充电后，以电流 20A 放电至终止电压 43.2V，停止放电。如果没有特别说明，电池充放电间隔时间为 30 分钟。
（The capacity means the discharge capacity of the battery, which is measured with discharge current10A with 40V cut-off within 0.5 hour after the Standard Charge.）</td><td>最小容量
（Minimum Capacity）≥95Ah</td></tr>
<tr><td>3.3
循环寿命
Cycle Life</td><td>标准充电结束后,搁置 30min 后,在 25±3℃环境下,以 0.2C 恒流放电 100%DOD,再进行下一个循环，循环 2000 次以后搁置 1 天，按上述 3.2 测试容量。
（At the end of standard charging, after 30 minutes of shelving, 80%DOD with constant current of 0.5C in the (25±3℃) environment, the next cycle is carried out, after 2000 cycles, use it for 1 day and test the capacity according to the above 3.2.）</td><td>容量≥80%最小容量
Capacity≥80% Minimum Capacity</td></tr>
<tr><td>3.4
放电特性
Discharge Character</td><td>
<table>
<tr><td>放电电流（Discharge current）</td><td colspan="4">放电温度（Discharge Degree）</td></tr>
<tr><td>20A</td><td>-20℃</td><td>0℃</td><td>25℃</td><td>60℃</td></tr>
<tr><td colspan="5">电池按 3.1 规定充电。按上表的温度进行放电，放电容量比最小容量需满足上述要求，电池必须先在该试验温度中放置 6～8 个小时。
（Batteries shall be charged according to 3.1 and discharged at 20A to 43.2Volts. Batteries shall be stored for 6～8 hours at the test</td></tr>
</table>
</td><td>-20℃放电容量
Discharge capacity≥45%

0℃放电容量
Discharge capacity≥60%

60℃放电容量
Discharge capacity≥90%</td></tr>
</table>

4. Drawing(尺寸图) Unit: mm)

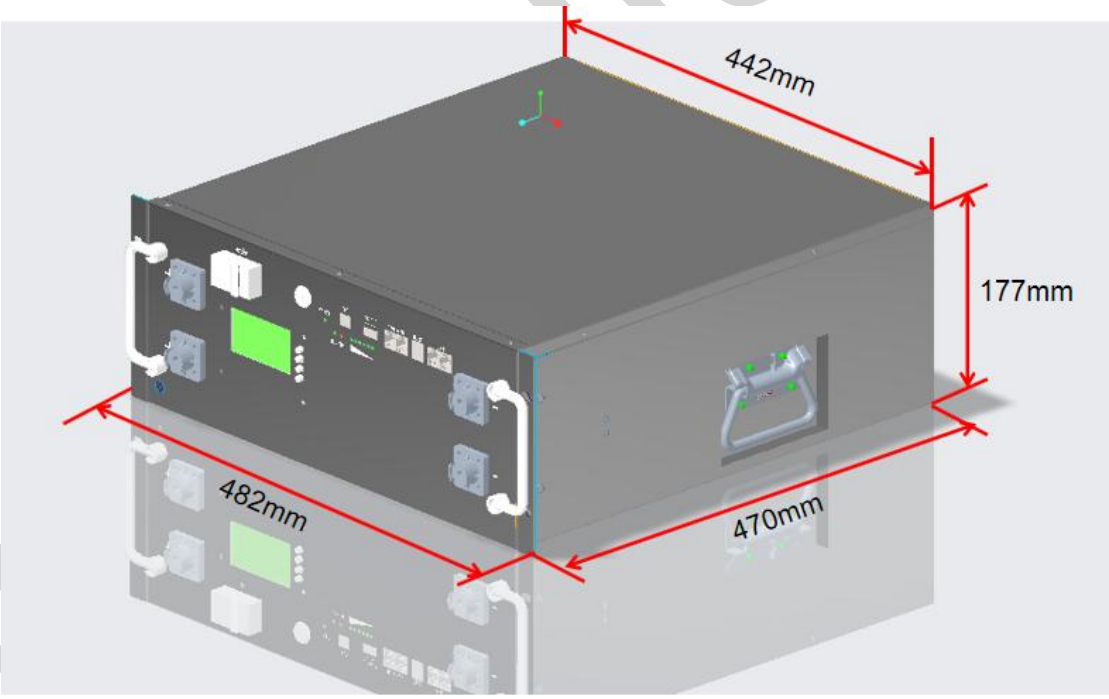

4.1 Schematic diagram (示意图)

4.2 Port definitions 端口定义

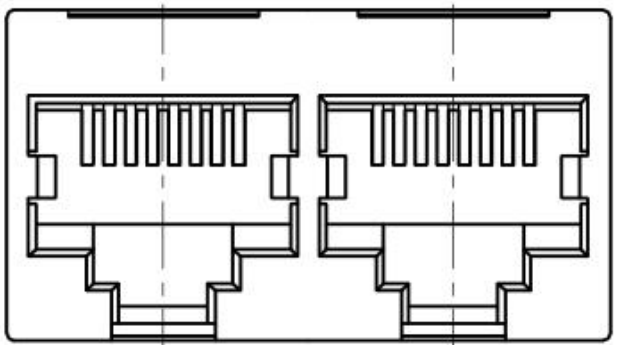

CAN 和 RS485 接口

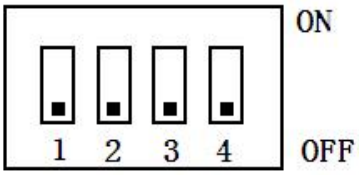

拨码开关

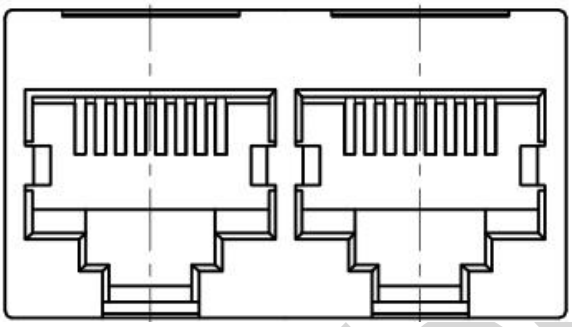

并联通讯端口

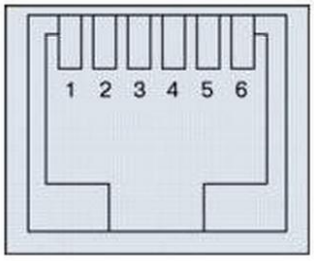

RS232 通讯接口

RS485/CAN-Port 接口

RS485--采用 8P8C 立式 RJ45 插座		CAN-采用 8P8C 立式 RJ45 插座	
RJ45 Pin 引脚	definition 定义说明	RJ45 Pin 引脚	definition 定义说明
1、8	RS485-B1	1、8	RS485-B1
2、7	RS485-A1	2、7	RS485-A1
3、6	GND	3、6	GND
4、5	NC	4、5	NC

Parallel connection 并联通讯端口

RS485--采用 8P8C 立式 RJ45 插座		RS485--采用 8P8C 立式 RJ45 插座	
RJ45 Pin 引脚	definition 定义说明	RJ45 Pin 引脚	definition 定义说明
1、8	RS485-B	1、8	RS485-B
2、7	RS485-A	2、7	RS485-A
3、6	GND	3、6	GND
4、5	NC	4、5	NC

Code Switch 拨码开关：Set Communication Address ID 设置通讯地址 ID

Address 地址	Code Switch Position 拨码开关位置

	1#	2#	3#	4#
0	OFF	OFF	OFF	OFF
1	ON	OFF	OFF	OFF
2	OFF	ON	OFF	OFF
3	ON	ON	OFF	OFF
4	OFF	OFF	ON	OFF
5	ON	OFF	ON	OFF
6	OFF	ON	ON	OFF
7	ON	ON	ON	OFF
8	OFF	OFF	OFF	ON
9	ON	OFF	OFF	ON
10	OFF	ON	OFF	ON
11	ON	ON	OFF	ON
12	OFF	OFF	ON	ON
13	ON	OFF	ON	ON
14	OFF	ON	ON	ON
15	ON	ON	ON	ON

RS232-Port 接口

RS232--采用 6P6C 立式 RJ11 插座	
RJ11-Pin 引脚	定义说明 definition
2	NC
3	TX（单板）
4	RX（单板）
5	GND

LED-status 工作状态指示

Status **状态**	**Normal/Alarm/ Protection** **正常/告警/保护**	**ON/ OFF**	**RUN**	**ALM**	**Fuel gauge LED 电量指示**						**说明**
		●	●	●	●	●	●	●	●	●	
Power off 关机	Sleep 休眠	OFF	OFF	OFF	OFF	OFF	OFF	OFF	OFF	OFF	All off
Standby 待机	Nomal 正常	ON	flash1	OFF	Indicate as per fuel gauge 依据电量指示						Standby 待机状态
	Alarm 告警	ON	flash1	flash3							Low boltage 模块低压
Charge 充电	Nomal 正常	ON	ON	OFF	Indicate as per SOC (The LED of max. SOC Flash2) 依据电量指示 (电量指示最高 LEDflash2)						Alarm will not flash when ocer-charge protection 过充告警时 ALM 不闪烁
	Alarm 告警	ON	ON	flash3							
	Over-charge	ON	ON	OFF	ON	ON	ON	ON	ON	ON	If there is no

	protection 过充保护										power supply, the indicator is standby status 若无市电，指示灯转为待机状态
	Temperature /over-current/failure 温度、过流、失效保护	ON	OFF	ON	OFF	OFF	OFF	OFF	OFF	OFF	Stop charging 停止充电
Discharge 放电	Nomal 正常	ON	flash3	OFF	Indicate as per SOC 依据电量指示						
	Alarm 告警	ON	flash3	flash3							
	Over-discharge 欠压保护	ON	OFF	OFF	OFF	OFF	OFF	OFF	OFF	OFF	Stop discharging 停止放电
	Temperature/over-current/short/reverse/failure 温度、过流、短路、反接、失效保护	ON	OFF	ON	OFF	OFF	OFF	OFF	OFF	OFF	Stop discharging 停止放电
Failure 失效		OFF	OFF	ON	OFF	OFF	OFF	OFF	OFF	OFF	Stopcharging discharging 停止充、放电

SOC Indicator 容量指示说明

Status 状态		Charge 充电						Discharge 放电					
Fuel gauge indicator 容量指示灯		L6●	L5●	L4●	L3●	L2●	L1●	L6●	L5●	L4●	L3●	L2●	L1●
SOC 电量（%）	0 ~ 16.6%	OFF	OFF	OFF	OFF	OFF	flash2	OFF	OFF	OFF	OFF	OFF	ON
	16.6 ~ 33.2%	OFF	OFF	OFF	OFF	flash2	ON	OFF	OFF	OFF	OFF	ON	ON
	33.2 ~ 49.8%	OFF	OFF	OFF	flash2	ON	ON	OFF	OFF	OFF	ON	ON	ON
	49.8 ~ 66.4%	OFF	OFF	flash2	ON	ON	ON	OFF	OFF	ON	ON	ON	ON
	66.4 ~ 83.0%	OFF	flash2	ON	ON	ON	ON	OFF	ON	ON	ON	ON	ON
	83.0 ~ 100%	flash2	ON	ON	ON	ON	ON	ON	ON	ON	ON	ON	ON
RUN indicator 运行指示灯●		ON						flash(flash3)					

4.3 Function diagram (功能示意图)

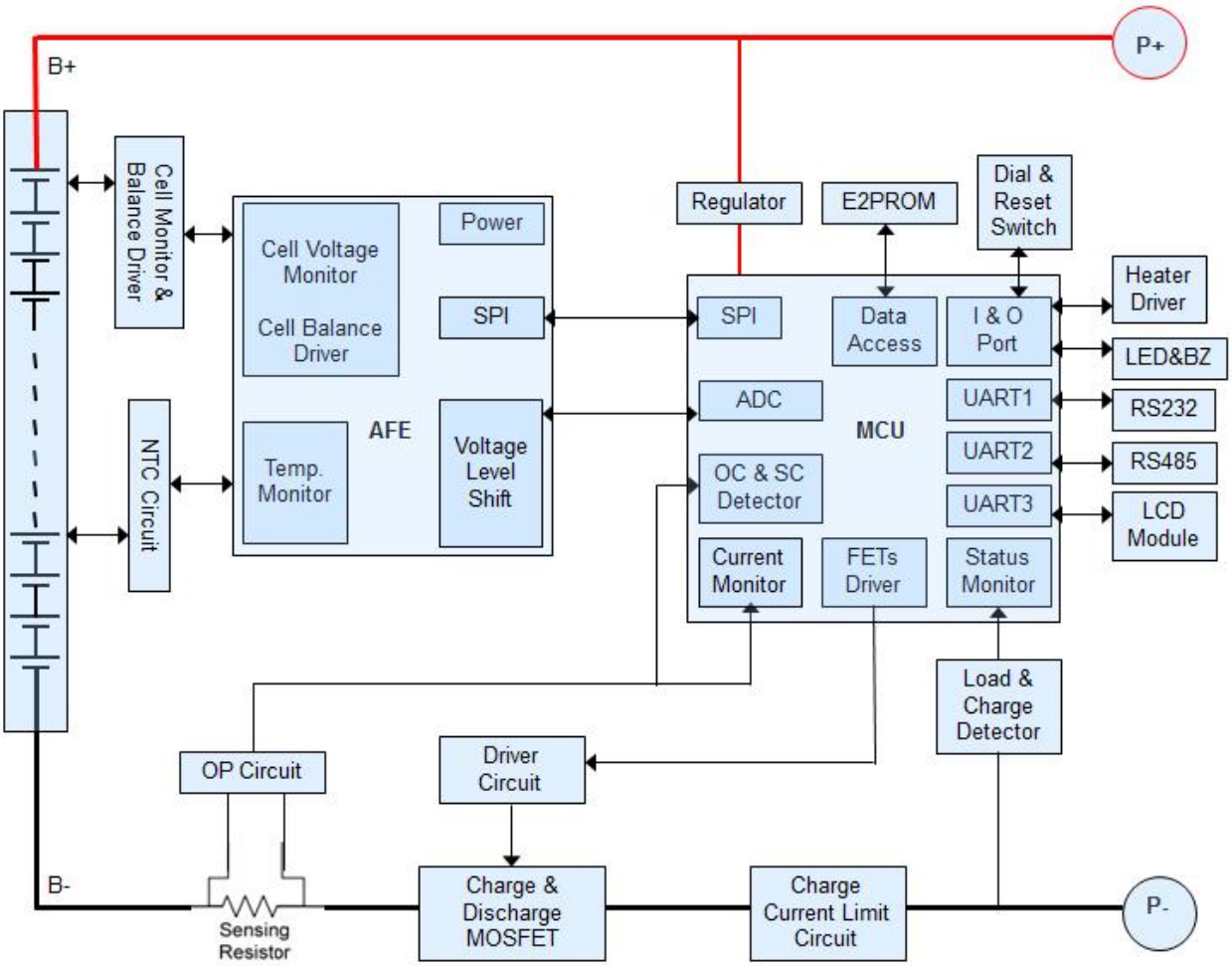

5. Protection Circuitry Function(保护电路功能)

5.1 Parameters BMS (BMS 参数)

No 序号	Item 项目		Default parameters 默认参数	Adjustable 是否可设	Remark 备注
1	Over-charge protection (single cell) 单体过充保护	Alarm voltage 单体过充告警电压	3600mv	yes	
		Over-charge voltage 单体过充保护电压	3700mv	yes	
		Over-charge delay time 单体过充恢复延时	1s	yes	
	Over-charge protection	Over-charge release voltage	3380mv	yes	

	release (single cell) 单体过充恢复	单体过充恢复电压			
		Released by SOC 容量恢复	SOC < 96%	yes	
		Released by discharging 放电恢复	Discharge current 放电电流 > 1A		
2	Over-discharge protection(single cell) 单体过放保护	Alarm voltage 单体过放告警电压	2900mv	yes	If the battery cannot recover within 30s after over-discharge protection, it will be at low power consumption mode 过放保护 30S 后，仍然无法恢复时，系统进入低功耗模式
		Over-discharge voltage 单体过放保护电压	2700mv	yes	
		Over-discharge delay time 单体过放保护延时	1s	yes	
	Over-discharge protection release(single cell) 单体过放恢复	Over-discharge release voltage 单体过放恢复电压	3000mv	yes	
		Charging recover 充电解除	Connect charger 接入充电器		
3	Over-charge protection (battery) 整体过充保护	Alarm voltage 整体过充告警电压	57.6V	yes	
		Over-discharge voltage 整体过充保护电压	58.4V	yes	
		Over-discharge delay time 整体过充保护延时	1S	yes	
	Over-charge protection (battery) release 整体过充恢复	Over-discharge release voltage 整体过充恢复电压	54V	yes	
		Released by SOC 容量恢复	SOC < 96%	yes	
		Released by discharging Released by discharging 放电恢复	Discharge current 放电 > 1A		
4	Over-discharge protection (battery) 整体过放保护	Alarm voltage 整体过放告警电压	46V	yes	If the battery cannot recover within 30s after over-discharge protection, it will be at low power consumption mode 过放保护 30S 后，仍然无法恢复时，系统进入低功耗模式
		Over-discharge voltage 整体过放保护电压	43.2V	yes	
		Over-discharge delay time 整体过放保护延时	1S	yes	
	Over-discharge protection (battery) release 整体过放保护恢复	Over-discharge release voltage 整体过放恢复电压	48V	yes	
		Released by charging 充电恢复	Connect charger 接入充电器		
5	Over-current （charge）protection 充电过流保护	Alarm current 充电过流告警电流	105A	yes	If over-current(charge) protection occurred 10 times
		Protection current 充电过流保护电流	110A	yes	

		Over-current delay time 充电过流保护延时	1S	yes	consecutively, the protection will not release automatically 连续 10 次保护将锁定该状态，不在自动恢复
	Over-current （charge）protection release 充电过流恢复	Automatically release 自动恢复	1Min 后恢复		
		Released by discharging 放电恢复	Discharge current 放电 > 1A		
6	Over-current(discharge) protection 1 放电过流一级保护	Alarm current1 放电过流一级告警电流	105A	yes	
		Protection current1 放电过流一级保护电流	110A	yes	
		Over-current delay time 1 放电过流一级保护延时	1S	yes	
	Over-current(discharge) protection 1 release 放电过流一级恢复	Automatically release 自动恢复	1Min 后恢复		
		Released by charging 充电恢复	Charge current 充电电流 > 1A		
7	Over-current(discharge) protection 2 放电过流二级保护	Protection current2 放电过流二级保护电流	≥150A	yes	
		Over-current delay time 2 放电过流保护延时	100±50ms	yes	
	Over-current(discharge) protection 2 release 放电过流二级恢复	Automatically release 自动恢复	1Min 后恢复		
		Released by charging 充电恢复	Charge current 充电电流 > 1A		
8	Short circuit protection 短路保护	Short Protection 短路保护功能	Yes		
		Short Protectionrelease 短路保护恢复	Released by charging 充电恢复		
			Removal of load 断开恢复		
9	Over-temperature (MOS) protection MOS 高温保护	Alarm temperature MOS 过温告警温度	90℃	yes	
		Protection temperature MOS 过温保护温度	110℃	yes	
		Protection temperature release MOS 过温恢复温度	85℃	yes	
10	Temperature protection（cell） 电芯温度保护	Low temperature (charge) alarm 充电低温告警温度	0℃	yes	
		Low temperature (charge) protection 充电低温保护温度	-5℃	yes	
		Low temperature (charge) protection release 充电低温恢复温度	0℃	yes	

		High temperature (charge) alarm 充电高温告警温度	50℃	yes	
		High temperature (charge) protection 充电高温保护温度	55℃	yes	
		High temperature (charge) release temperature 充电高温恢复温度	50℃	yes	
		High temperature (charge) release temperature release 放电低温告警温度	-15℃	yes	
		Low temperature (discharge) protection 放电低温保护温度	-20℃	yes	
		Low temperature (discharge) protection release 放电低温恢复温度	-15℃	yes	
		High temperature (discharge) alarm 放电高温告警温度	55℃	yes	
		High temperature (discharge) alarm release 放电高温保护温度	60℃	yes	
		High temperature (discharge) release 高温恢复温度	55℃	yes	
11	Ambient temperature protection 环境温度保护	Low ambient temperature alarm 环境低温告警温度	-20℃	yes	
		Low ambient temperature protection 环境低温保护温度	-25℃	yes	
		Low ambient release 环境低温恢复温度	-20℃	yes	
		High ambient temperature alarm 高温告警温度	65℃	yes	
		High ambient temperature protection 环境高温保护温度	70℃	yes	
		High ambient temperature protection release 环境高温恢复温度	65℃	yes	

12	Current consumption 功耗	Normal mode 正常工作模式	≤40mA		
		Low power consumption 低功耗模式	≤200uA		
13	Balancing function 均衡功能	Balancing start voltage 均衡开启电压	3400mv	yes	
		Delta voltage 开启压差	30mv	yes	
14	Low capacity alarm 低电量告警	Low capacity alarm 低电量告警	SOC＜5%	yes	No alarm during charging 充电时不告警
15	Sleep function 休眠功能	Sleep voltage 休眠电压	2500mv	yes	
		Delay time 延迟时间	5Min	yes	
16	Current limiting module 限流模块		20A	yes	The current limiting enabled maximum value 限流开启最大值 100A

5.2 Function declaration (功能说明)

1) It has the functions of single voltage and overall voltage detection, overcharge and over discharge alarm and protection. Static voltage sampling accuracy can reach ≤20mV at room temperature

具有单体电压、总体电压检测，过充、过放告警及保护功能。常温下静态电压采样精度可达≤20mV

2) It has charge and discharge current detection, charge and discharge over current alarm and protection functions. The charging current is displayed as positive, while the discharge current is displayed as negative. The sampling accuracy of current at room temperature can be less than or equal to 2%@FS

具有充、放电电流检测，充、放电过流告警及保护功能。充电电流显示为正，放电电流显示为负，常温下电流采样精度可达≤2%@FS

3) With cell, environment, MOS temperature detection, cell high and low temperature alarm and protection function, MOS high temperature alarm and protection function, environment high and low temperature alarm function. At normal temperature, the sampling accuracy can be less than 2℃

具有电芯、环境、MOS 温度检测，电芯高、低温告警及保护功能，MOS 高温告警及保护功能，环境高、

低温告警功能。常温下温度采样精度可达≤2℃

4) The software control function can easily set the protection parameters such as overcharge, over discharge, over current, over temperature, under temperature, capacity, sleep, balance, storage and other parameters through the upper computer software

上位机软件控制功能，可通过上位机软件方便地对过充、过放、充放电过流、过温、欠温等保护参数，容量、休眠、均衡、存储等参数进行设置

5.3 Description of communication (通讯说明)

The battery can communicate with the host through the RS232 interface. Then various information of the battery can be monitored through the host, including battery voltage, current, temperature, status, SOC and battery production information, etc., The default baud rate is 9600.

具有与上位机通信的 RS232/RS485 接口，BMS 可以通过 RS232 接口与上位机进行通讯，从而可通过上位机监控电池的各种信息，包括电池电压、电流、温度、状态、SOC 及电池生产信息等，默认波特率为 9600。与上位机通讯界面如下图所示：

5.4 Battery Power on/off Procedure(开关机)

(1) When the BMS is in hibernation state, press the button for 3 to 6S and release it. The protection board is activated, and the LED indicator lights up successively for 0.5 seconds from "RUN".
BMS 休眠状态时，按键（3~6S）后松开，保护板被激活，LED 从“RUN”开始依次点亮 0.5 秒。

(2) When the BMS is activated, press the button for 3 to 6S and release it. The protection board is put to sleep and the LED indicator lights up successively for 0.5 seconds from the lowest power indicator.
BMS 激活状态时，按键（3~6S）后松开，保护板被休眠，LED 从最低电量灯开始依次点亮 0.5 秒。

(3) When the BMS is activated, press the button (6-10s) and release it. The protection board is reset and all LED lights are on for 1.5 seconds at the same time.
BMS 激活状态时，按按键（6~10S）后松开，保护板被复位，LED 灯全部同时点亮 1.5 秒

5.5 休眠与唤醒

Sleep 休眠

When any of the following conditions are met, the system enters the low-power mode
当满足以下任意一条件时，系统进入低功耗模式：

(1) Over-discharge (single cell or battery) protection didn’t release within 30 seconds
单体或总体过放保护 30 秒内仍未解除。
(2) Release the button after pressing the button for 3 seconds
按下按键（3~6S），松开按键后。
(3) The lowest cell voltage is lower than the sleep voltage, and the duration reaches the sleep delay time
最低单体电压低于休眠电压，并且持续时间达到休眠延迟时间（同时满足无通信、无保护、无均衡、无电流）。
(4) The standby time exceeds 24 hours(no communication/ no charging or discharging/ no AC)
待机时间超过 24 小时（无通信、无充放电，无市电）。
(5) Force shutdown through the host computer software
通过上位机软件强制关机。

Before entering sleep, make sure that there is no charger connected, otherwise it will not be able to enter low power consumption mode.
进入休眠前，需确保输入端未接入外部电压，否则将无法进入低功耗模式。

Wake up 唤醒

(1) Connect the charger, the output voltage of the charger must be greater than 48V.
接入充电器，充电器输出电压需大于 48V。
(2) Press the button for 3S, after releasing the button
按下按键（3~6S），松开按键后。
(3) Use RS232 for communication
(4) RS232 激活

Ps：If the battery fallen into low power consumption mode after single cell or battery over-discharge protection, it will wake up regularly every 4 hours, and turn on charging and discharging MOS. If the battery can be charged, it will exit the sleep status and enter normal charging; If the battery cannot be charged after 10 consecutive automatic wake-ups, it will not wake up automatically. When the system is defined as the end of charging, after 2 days(48hours) of standby (standby time setting value), the recovery voltage is not reached, and the charging is forced to resume until the end of recharging.
单体或总体过放保护后进入低功耗模式，每 4 个小时定时唤醒一次，开启充放电 MOS。如可充电，将退出休眠状态进入正常充电；如果连续 10 次自动唤醒无法充电，将不再自动唤醒。当系统定义为充电结束后，待机 2 天/48h（待机时间设定值）后仍未达到恢复电压，强制恢复充电至再次充电结束。

6. Handling of battery (电池操作注意事项)

Please read and follow the handling instructions before use. Improper use may cause heat, fire, rupture, damage or capacity deterioration of the battery. LithPower is not responsible for any accidents caused by the usage without following our handling instructions:

使用电池前请仔细阅读规格书和电池箱表面的警示标志，不当的使用电池可能会引起电池过热损坏，对于未按规格书操作造成的任何意外事故，深圳市力思能科技有限公司不负担任何责任，为了使电池安全的使用及处理请在使用前认真的阅读操作说明：

警告 Warning

Battery must be far away from heat source, high voltage, and no exposed in sunshine for long time;
电池请远离热源，高压场所，并避免长时间的日光暴晒；
Never throw the battery into water or fire;
不要将电池投入水或火中；
Never reverse positive and negative terminals when use the battery;
不要接反电池的正负极；

Never connect the positive and negative terminals of battery with metal;
不要用金属短接电池正负极；
Never knock, throw or trample the battery;
避免过分的物理震动和冲击电池，不要撞击、摔落、踩踏电池；
Never disassemble the battery without manufacturer's permission and guidance;
未经厂家许可和指导，严禁私自拆卸或组装电池；
Never mixed the battery of different manufacturers, types or models with LithPower;
不能将其他不同厂家，类型，型号的电池混合使用.

注意 Tips

Keep the battery against high temperature. Otherwise it will cause battery heat, get into fire or lose some functions and reduce the life;
请不要高温条件下使用或存储，否则会引起电池发热、起火或使用寿命降低；
When the battery run out of power, please charge it within 15 days；
电池用完电，请及时充电；
Please use the original or recommended charger for this battery
请使用配套或者推荐的专业锂电池充电器；
If the battery leaks and get into the eyes or skin, do not wipe, instead, rinse it with clean water and see doctor immediately;
如果电池漏液，接触眼睛或皮肤，请立刻用大量清水冲洗并寻求医生帮助；
Do not use the battery when there exist abnormal conditions such as odour, discoloration, noise, leakage, serious deformation, etc.
电池有异味、变色、噪音、漏液、严重变形等异常情形时，请停止使用；
Please far away from children or pets.
请将电池放置在宠物和儿童接触不到的位置，禁止小孩接触电池

7. Period of Warranty(保质期)

The period of warranty is 24 months from the date of shipment. LithPower guarantees to give a replacement in case of battery with defects proven due to manufacturing process instead of the customer abuse and misuse.电池的保质期从出货之日算起为 24 个月。如果证明电池的缺陷是在制造过程中形成的而不是由于用户滥用及错误使用造成，本公司负责退换电池。

8. Battery transportation and storage (电池的运输与存放)

1）The capacity of delivery Battery is approximately at 50% of charging. During transportation, keep the battery from acutely vibration, impacting, solarization, drenching.交付的电池大约充电 50%容量。运输过程应防止电池剧烈震动，撞击，暴晒，受潮。

2）The batteries should be stored at room temperature, charged to about 30% to 50% of capacity. We recommend that batteries be charged about once per three months to prevent over-discharge.
电池应当在室温下存放，应充到 30%至 50%的电量。如长时间储存，建议每三个月充一次电以防止电池过放电。

9. Packaging information (包装信息)

仅供参考

9.1 配件清单(part list)

10. Product Liability (产品责任)

Any other items which are not covered in this specification shall be agreed by both parties. It can be carried out if there is no any new written agreement or modification notice occurred.
本说明书未包括事项应由双方协议确定，如果没有新的书面约定或更改通知，即可按此执